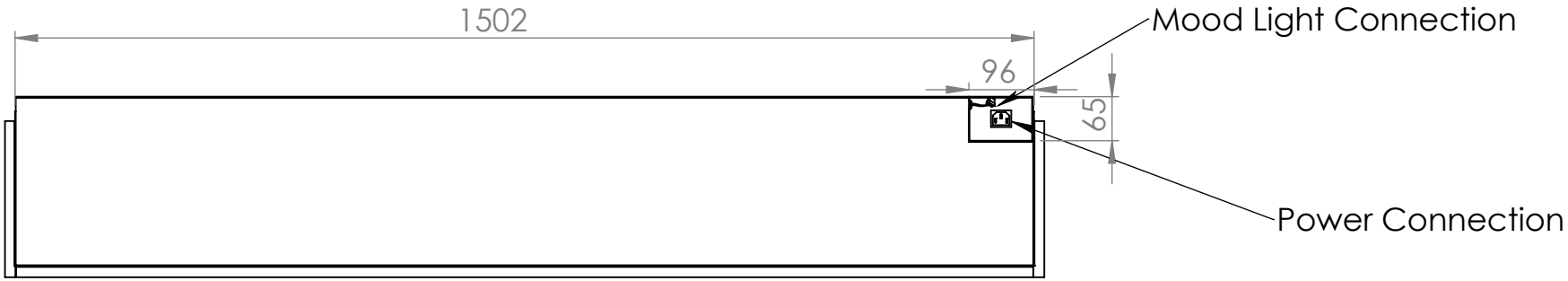

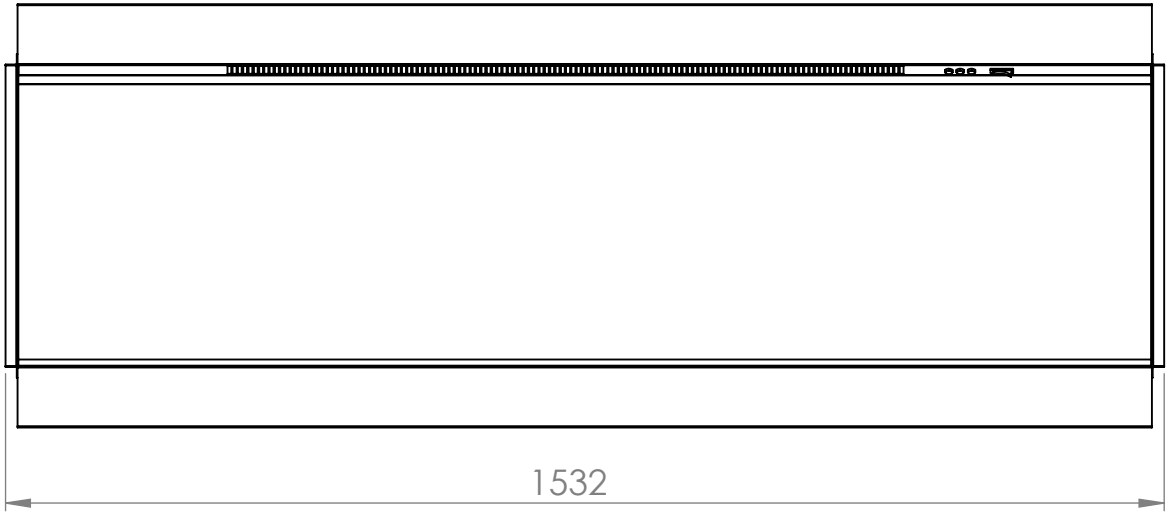

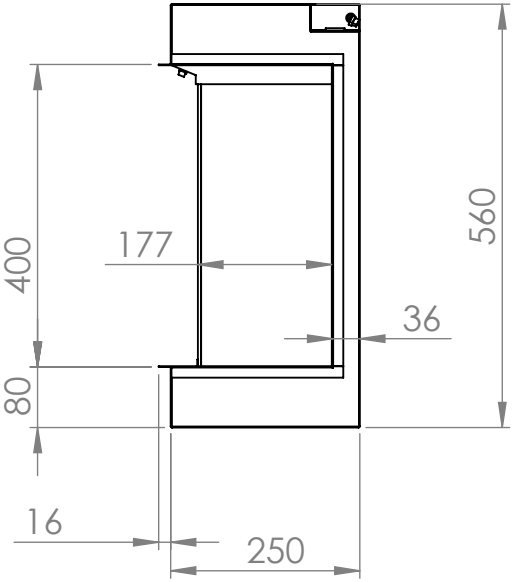

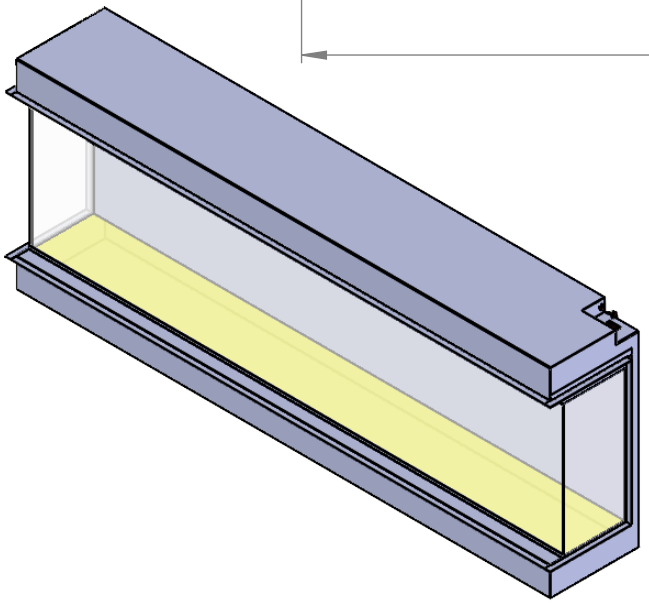

		DATE
DRAWN	Barry Charlton	30/08/2023
CHK'D		
Issue No.		
DATE		
CHANGE		

DEBUR AND BREAK SHARP EDGES

UNLESS OTHERWISE SPECIFIED:
DIMENSIONS ARE IN MILLIMETERS
TOLERANCES:
LINEAR: +/- 0.05
ANGULAR: +/- 0.05

FINISH: natural

MATERIAL:

SCALE:1:10 | SHEET 1 OF 1

CHARLTON & JENRICK LTD
Unit D, Stafford Park 2,
Telford, Shropshire TF3 3AR
0044(0)845 519 5991

TITLE: Luminosa 1500 Engine

DWG NO.

REVISION

PART NO. -

DO NOT SCALE DRAWING