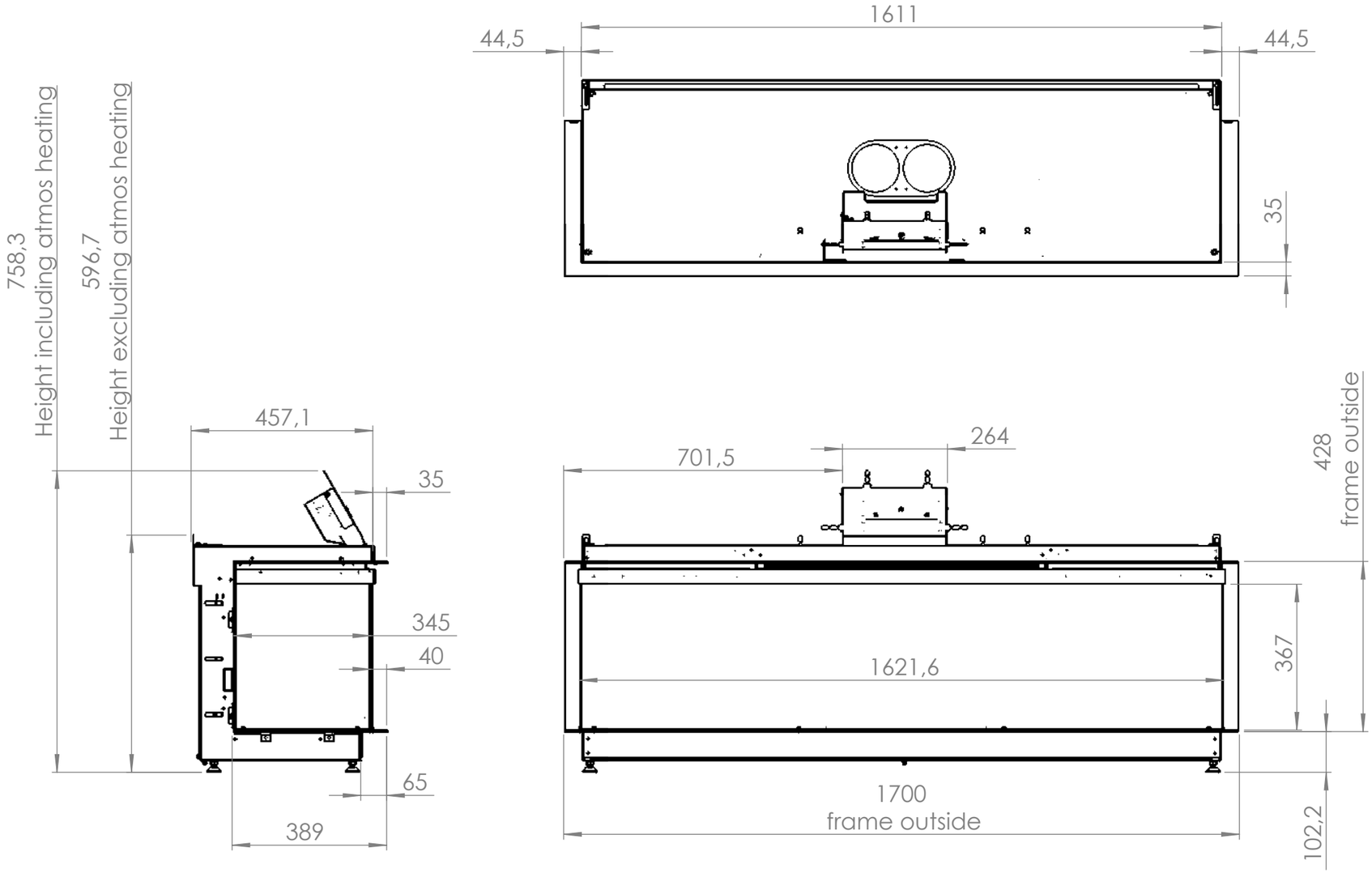

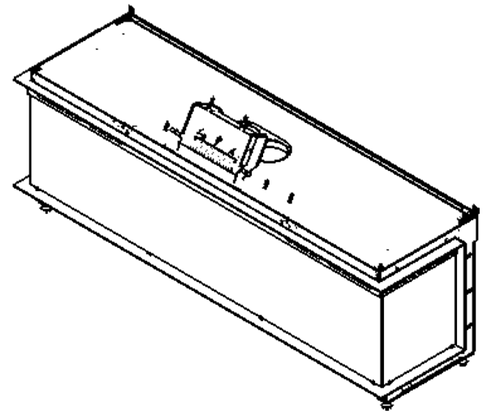

Note:
Minimum of 2mm clearance around frame.
All materials must withstand a temperture of minimum 80 degrees.
A minimum of 100 cm2 of free area is required.
Ventilation must be provided at both the bottom and top of the housing.

KALFIRE
FIREPLACES

Treatment:			
Material:			
Mass (Kg): 109.57	Date: 4-4-2023	Author: MM	Third Angle Projection ISO 128-Method A
Description: E-ONE 160 3S			
Document number: KF05129	Rev.: 00	Scale: 1:12.5	Size: A3 / Page: 1/1

All rights preserved. All dimensions in mm.
Copywrited / Reprints prohibited. Kal-fire BV.

State : In Progress